AI-POWERED ASSISTIVE VISION SYSTEM

Dr. K. Aparna
Associate Professor
Deparment of ECE
JNTUA College of Engineering kalikiri
Annamayya District, Andhra Pradesh
aparna.ece@jntua.ac.in

T Keerthi swaroopa
UG Student
Deparment of ECE
JNTUA College of Engineering kalikiri
Annamayya District, Andhra Pradesh
Swaroopatatireddy04@gmail.com

D Suma sree
UG Student
Department of ECE
JNTUA College of Engineering kalikiri
Annamayya District, Andhra Pradesh
suma32005@gmail.com

M Bhaskar
UG Student
Deparment of ECE
JNTUA College of Engineering kalikiri
Annamayya District, Andhra Pradesh
mundribhaskar123@gmail.com

P Naga Lakshmi
UG Student
Department of ECE
JNTUA College of Engineering
kalikiri, Annamayya District, Andhra
Pradesh
nagalakshmip0702@gmail.com

***Abstract*—The AI-Powered Assistive Vision System is an affordable, portable device built using a RaspberryPi 4 to help people with visual impairments. It is designed mainly for users in rural and semi-urban India, where expensive assistive gadgets are often not available or affordable. The device uses a camera to "see" the environment and speaks out useful information through a clear audio output. With just four physical buttons, users can make the device read printed text in English, Hindi, or Telugu, identify common objects around them, tell how far an object is, and announce the current time. The buttons are carefully designed to avoid accidental presses, and the audio system ensures the device speaks one message at a time without overlapping. The entire system works offline, so it doesn't need internet access, making it reliable even in areas with poor connectivity. Overall, it offers powerful features at a very low cost, giving visually impaired users more independence in their daily lives.**

Keywords
Assistive Technology, Raspberry Pi 4, OCR, MobileNet-SSD, gTTS, GPIO, Visual Impairment, Tesseract, Multilingual, Offline AI

I. INTRODUCTION

Visual impairment is considered one of the most prevalent sensory disabilities in the world. According to the WHO (2023), approximately 285 million people in the world are living with some form of visual impairment, including 39 million people who are totally blind. Among these numbers, Indians have a significant share, with approximately 7.5 million blind people, accounting for almost 20% of the world's total blind population. In the case of visually impaired people, their ability to lead their lives independently to a large extent depends upon the availability of technology to replace their impaired vision.

For visually impaired people, in their day-to-day lives, there are generally four major problems to be solved. These include reading printed texts, identifying objects in their surroundings, measuring distance to avoid obstacles, and obtaining basic information regarding time. Though there are several available solutions in the form of OrCam MyEye or Google Lookout, these are either too expensive or do not support regional languages like Telugu.

The AI-powered assistive vision system designed in the project aims to overcome the limitations mentioned above. The proposed system is based on the low-cost Raspberry Pi 4 model B and offers multilingual OCR support for English, Hindi, and Telugu, object detection, distance estimation, and IST time announcement, all through a simple four-button interface that a completely blind person can use through touch. The entire system runs offline using open-source tools like Tesseract, MobileNet-SSD, Google gTTS, and OpenCV.

Apart from the technical merits of the proposed system, the project itself offers a practical solution to the problem of assistive technology that can be adopted throughout the country, given the linguistic and economic requirements of the people of India.

II. PROPOSED METHODOLOGY

The AI-Powered Assistive Vision System has been designed to be a portable, self-contained system that operates in its entirety in an offline mode. The design has been guided by three primary factors: accessibility, to ensure that it can be operated by a fully blind user; affordability, to ensure that the system has been built using only affordable hardware and open-source software; and localization, to ensure that the system supports Indian languages and IST time.

Hardware Architecture

The hardware architecture of the AI-Powered Assistive Vision System has been built around a Raspberry Pi 4 Model B processor with a RAM of 4 GB. The USB wide-angle camera has been chosen to capture the visual information. Four SPST push buttons have been connected to GPIO pins 17, 27, 22, and 23 to allow the user to control all the features of the system by touch. In addition, a USB audio adapter with a 3W speaker has been chosen to provide clear audio output. The system has been powered using a portable USB power bank. All the hardware selections have been explained in detail in Chapter 4.

Software Architecture

The software runs on Raspberry OS Bullseye (64-bit) and Python version 3.9. The libraries used are Tesseract for OCR, OpenCV for object detection, RPi.GPIO for buttons, gTTS for speech synthesis, and pytz for IST time. The standard Python libraries are also used. The system follows a one-script architecture to keep it simple and reduce the chances of failure.

Operational Flow

The device continuously monitors the buttons and the camera. When a button is pressed, the corresponding action is immediately executed. The action could be OCR, object detection, distance estimation, or time announcement. The result is then converted to speech and played through the speaker. Once the speech is done, the system goes back to the main loop and waits for the next button press.

III. ARCHITECTURE

The architecture of the AI-Powered Assistive Vision System is designed with the Raspberry Pi 4 acting as the main processing unit. The USB camera receives the live video feed, the ultrasonic sensor receives distance information, and the five push buttons enable the user to interact with the system by touch. The video feed is first enhanced with the help of OpenCV filters and then fed into the object detection module and the multilingual OCR engine that can read English, Hindi, and Telugu scripts. The ultrasonic sensor's information is processed by the distance calculation module. The results from the object detection module, the multilingual OCR engine, and the distance calculation module are fed into the audio feedback module that uses gTTS and ALSA audio drivers to speak the results clearly for the visually impaired user with the help of a speaker or headphones. The emergency button and the display screen for the user make the system simple and effective for the visually impaired user.

Fig. 1 – Block Diagram of AI-Powered Assistive Vision System ('Diya')

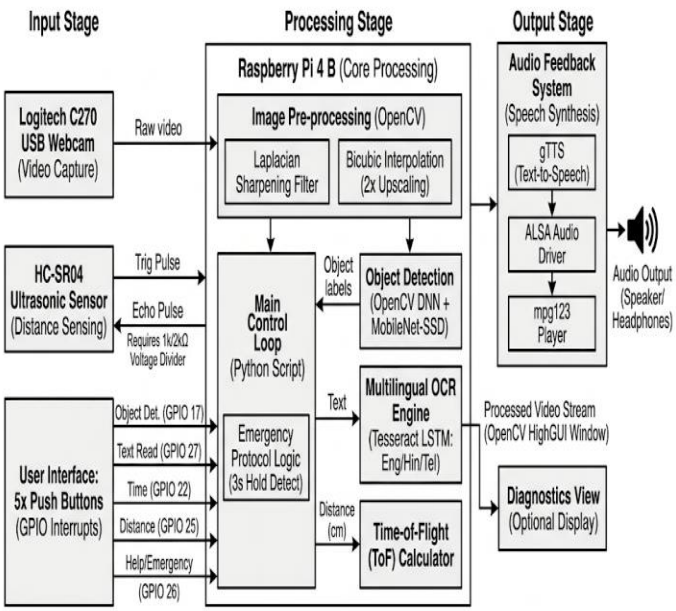

Fig. 1 – Block Diagram of AI-Powered Assistive Vision System ('Diya')

IV. HARDWARE COMPONENTS

a) Raspberry-Pi Model 4

Raspberry Pi is part of the Vision Voice system, and it is a small computer that can run an operating system and can perform complex operations. Raspberry Pi is used here for image capture, object detection, OCR, and text-to-speech, and it can control all the other parts of the system, like the camera, ultrasonic sensor, LCD screen, push button, and speakers, etc. Raspberry Pi is a good tool as it can run Python, OpenCV, and many machine learning tools, and it is good for computer vision and real-time processing, and its GPIO pins can be used to connect the other parts of the system, which is good for embedded systems like this.

Fig 1: Raspberry-Pi

b) Memory Card

The memory card is part of the Vision Voice system. It contains all the information, such as the operating system, required libraries, machine learning, codes, and tools like OCR. It contains all the boot files and codes. This card needs to be of large capacity, as the object detection models and the computer vision library require large space. It contains temporary images during processing. This part's performance and reliability depend greatly on its speed.

Fig 2: Micro SD Card

C) Web Camera

A webcam captures images of the environment and sends it to the Raspberry Pi for processing. The image is sent in real time or on demand. The image received from the webcam is used for object detection and text recognition. The quality of the image received from the webcam is essential for better detection and recognition.

Ultrasonic Sensor - Obstacle Detection Module.

Fig 3: USB camera module

d) Ultrasonic Sensor

The ultrasonic sensor measures the distance of nearby objects from it by transmitting high-frequency sound pulses and measuring the time taken for the reflected pulses to return. In this case, it is used as a warning device to alert the Raspberry Pi if an object is within a certain distance. This helps to avoid unnecessary image processing and also adds a layer of safety.

Fig 4: Ultrasonic Sensor

e) Ear Phones

The 3.5 mm jack is where the speech generated by the text-to-speech function is sent. It processes the names of the objects and text, and it turns them into audio. The audio is then played through the earbuds or speaker. Using the earphones is beneficial because it is private and helps ensure clarity, especially in loud environments. It also consumes less power than speakers. The audio feedback is important because it is the main way users interact with Vision Voice.

f) Push button

The pushbutton provides users with a simple and reliable method of controlling the system. Manually pressing the pushbutton switches on the OCR reading mode. Once the pushbutton is pressed, a signal is sent to the Raspberry Pi using a GPIO pin, and this signal tells the device to take a text-oriented image and begin extracting text. The physical pushbutton is used instead of the software method because it is easy to find and use without looking at it, thereby ensuring that users are taking deliberate actions and not engaging in constant OCR processing that would waste power and time.

Fig 5: Push Button

V. SOFTWARE REQUIREMENTS

a. Python

The language of choice in this application is Python, given its simplicity and strong association with computer vision and machine learning. It enables us to integrate camera control, sensors, OCR, and speech in one place.

b. OpenCV for Image Processing

The OpenCV library is used to process images coming from the camera prior to object detection and OCR. OpenCV also offers useful functions to resize images to desired sizes to enhance object detection accuracy.

c. Object Detection Model

The object detection model has low computational requirements to allow audio feedback to be sent to the user in near real-time as objects in the scene are detected.

d. OCR Engine for Text Extraction

The OCR module is responsible for extracting text information from images coming from the camera.

e. Text-to-Speech Engine for Audio Output

The TTS module is responsible for converting text information into audio that is sent to the user via earphones.

VI. WORKING

Upon turning on the device, the Raspberry Pi 4 boots from the microSD card that holds the operating system and the pre-installed application program. After the initialization process, all the connected components, including the ultrasonic sensor, camera module, push button, and audio interface, turn on. The ultrasonic sensor is always measuring the distance of objects in front of the user by sending and receiving sound waves. If an object is detected within a predefined threshold distance, the Raspberry Pi activates the camera to take a real-time image of the surroundings. The image is processed using OpenCV for enhancement and formatting before being sent to an object detection model such as MobileNet SSD. The model analyzes the image, identifies objects within the frame, and provides corresponding labels. The labels are then sent to a text-to-speech engine such as pyttsx3, which interprets the text and provides clear audio output through earphones connected to the system.

If The user presses the push button, the system switches to reading

mode. In this mode, the camera captures an image of printed text such as books, labels, or signboards. The captured image is processed and analyzed using **Tesseract OCR**, which extracts readable text from the image. The extracted text is then converted into speech and played back to the user. This dual-mode operation allows the system to provide both environmental awareness through object detection and independent reading assistance through OCR, making it a practical and efficient assistive solution for visually impaired individuals.

VII. RESULTS

Vision Voice has been tested in various indoor settings to observe its efficiency in object detection, obstacle sensing, and text reading. It has the ability to recognize different objects in real time and provide audio feedback through the earphones almost instantaneously. The ultrasonic sensor detects the obstacles and triggers the object detection module, which reduces the time spent on object detection. In addition, the reading mode has shown good efficiency in reading the text correctly, especially in favourable conditions such as the lighting and camera focus.

VIII. FUTURE SCOPE

- Recognition of currencies and colors
- Multilingual speech support
- Voice control in place of physical switches
- Building the system into a wearable device, like smart glasses
- Utilizing the internet to enhance the system
- Utilizing GPS for navigation assistance

IX. CONCLUSION

The Vision Voice system can be considered a smart assistant for people with visual impairments. The system allows users to recognize objects in real-time, detect obstacles, and read written words, all through the assistance of audio output. The system works on the Raspberry Pi and does not require an internet connection, making it an offline system. The system can be considered effective, especially with the use of lightweight models and image processing capabilities. The system can be considered to have great potential to become a highly useful system for people with visual impairments, especially with improvements in its size and features.

X. ACKNOWLEDGEMENT

The success of this paper includes help from our guide as well. We are grateful to our guide, Dr. K. Aparna, Associate professor, JNTUA College of engineering kalikiri, for her expertise that assisted us in our research.

REFERENCES

[1.] Kiran Gurav, Neel Joshi, Nida Desai, Shruti Ghorpade, “A Raspberry Pi-Based Text Reader&Object Detection System”, International Journal of Innovative Science and Research Technology, Volume 9, issue 8, August-2024.

[2.] Vaishnavi chirawande, aditi gade, madhur bhutada, akshaj kant, “VISION AI: A Portable Assistive Vision System for Visually Impaired Individuals Using Raspberry Pi”, International Journal of Innovative Research in Technology, Volume 10 Issue 11, April 2024.

[3.] Shweta Zunje, Sakshi Thorat, Shailesh Jadhav, “Object Detection for Blind Person”, International Journal of Creative Research Thoughts, Volume 12, Issue 4 April 2024.

[4.] Dr. Sankit Kassa, Manisha Inchanalkar, Amisha Kamble, Mayuri Inchanalkar, “Smart Glasses for Blind People”, International Journal of Innovative Research in Technology,Volume 7 Issue 12, May 2021.

[5] Himali R, Adithya S, and Ravishankara M N, "Assistive Device for the Visually Impaired using Face and Optical Character Recognition with Voice Activation," International Journal of Engineering Research & Technology (IJERT), Volume 14, Issue 4 April 2025.

[6.] Tushar Sharma and Udit Arora, "Regional Language Reading Aid for Blind People Using Raspberry Pi," IEEE International Conference on Electrical and Electronics Engineering (ICEECT), Volume 2 December 2024.

[7.] S. Russell and P. Norvig, “Artificial Intelligence: A Modern Approach", Pearson, 3rd Edition, 2010.